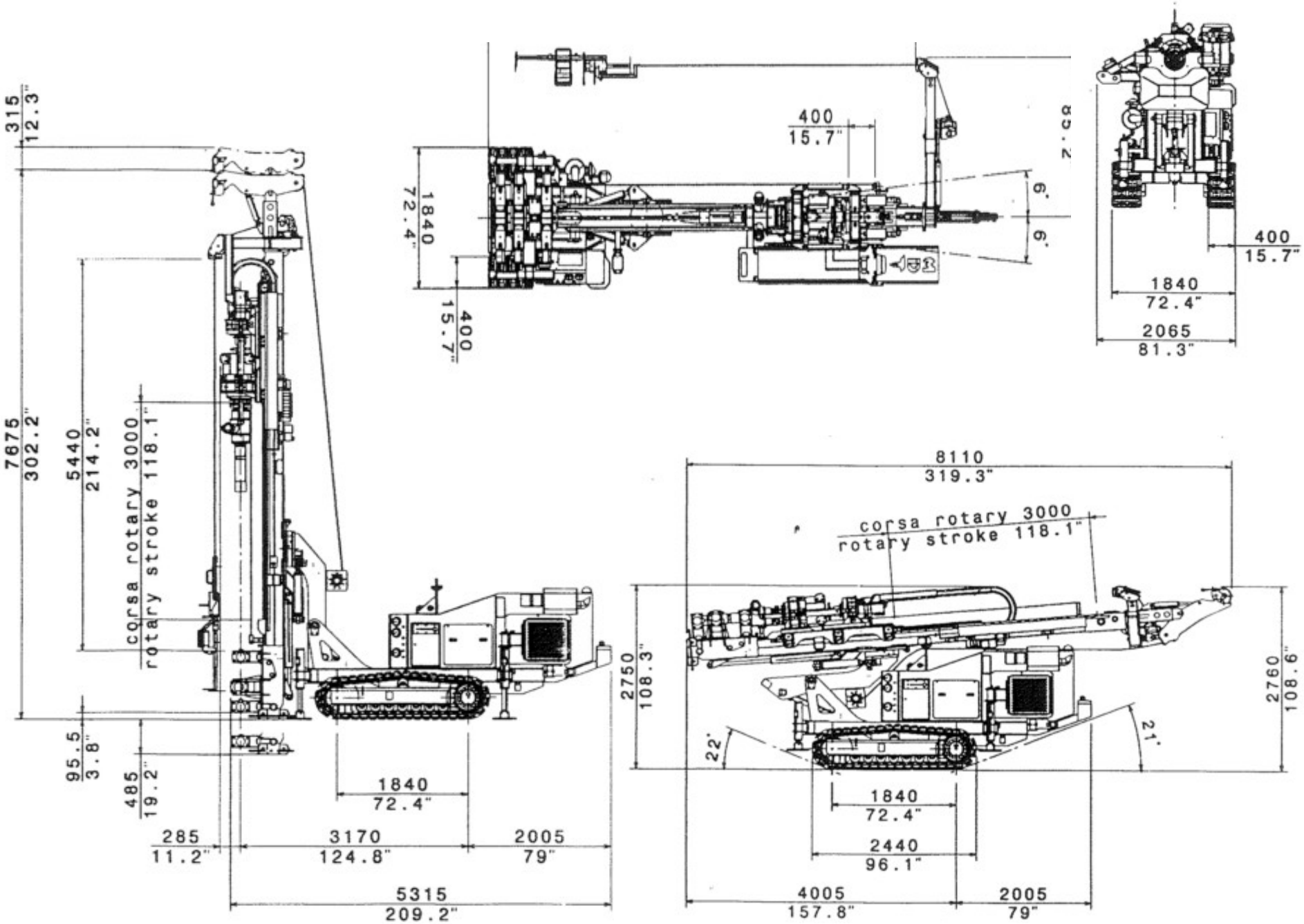
315
12.3"
7875
302.2"
5440
214.2"
corsa rotary 3000
rotary stroke 118.1"
95.5
3.8"
485
19.2"
1840
72.4"
285
11.2"
3170
124.8"
2005
79"
5315
209.2"
400
15.7"
1840
72.4"
400
15.7"
9°
9°
2065
81.3"
8110
319.3"
corsa rotary 3000
rotary stroke 118.1"
2750
108.3"
2760
108.6"
22°
21°
2440
96.1"
4005
157.8"